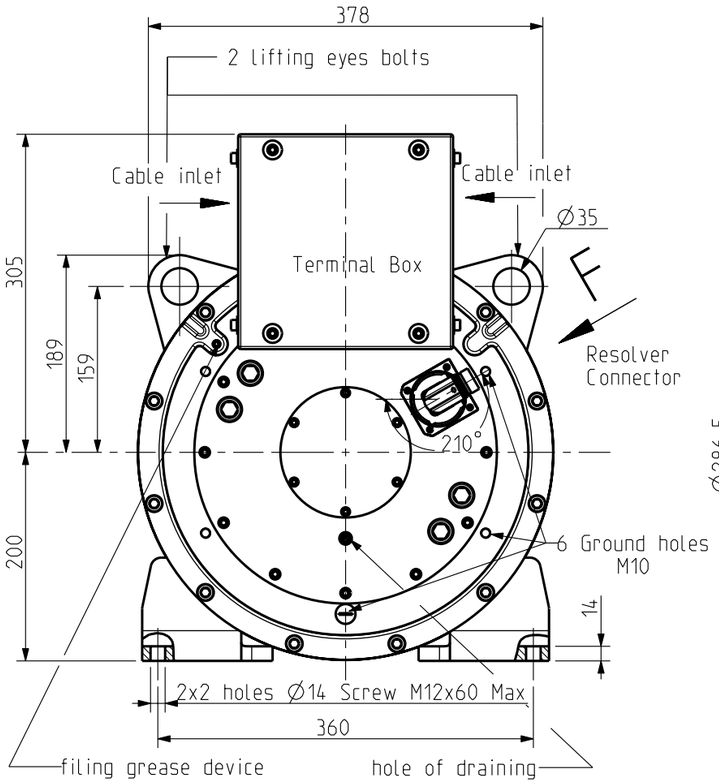

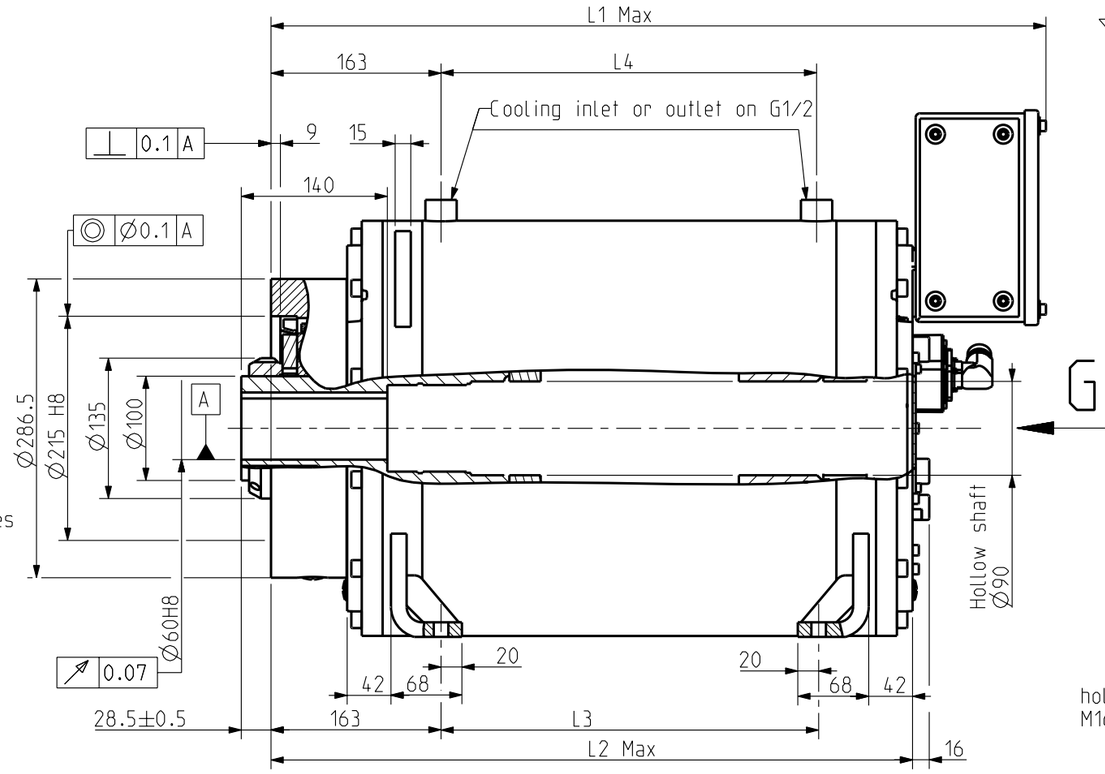

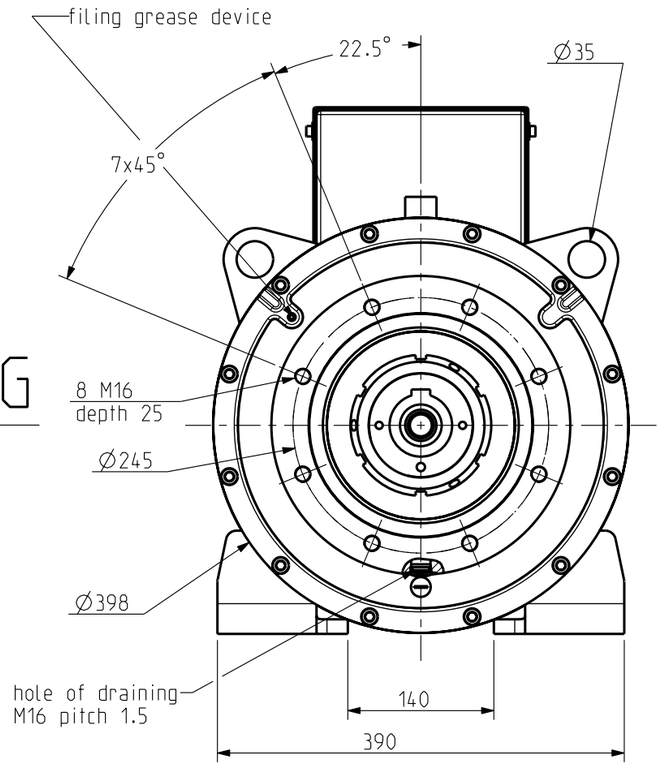

TERMINAL BOX

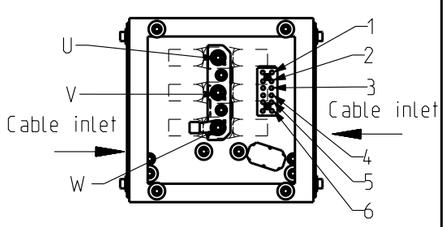

U : Phase U
V : Phase V
W : Phase W
1 : KTY + sensor (brown)
2 : KTY - sensor (white)
3 : PTC 150°C thermical sensor (black)
4 : PTC 150°C thermical sensor (black)
5 : PTC 140°C thermical sensor (white)
6 : PTC 140°C thermical sensor (blue)

Ground : M10
On rear flange

SENSOR CONNECTOR :

Cable definition fallow documentation "commissioning and use"

1 : U_P sensor
2 : no connection
3 : no connection
4 : 0V sensor
5 : no connection
6 : no connection
7 : U_P
8 : CLOCK
9 : CLOCK\
10 : 0V U_N
11 : no connection
12 : B+
13 : B-
14 : DATA
15 : A+
16 : A-
17 : DATA\

F view

EnDat Interfaces
Sinusoidal signal tension $1V_{CC}$

Power supply: 5V
Max. operating temperature: 100°C

Execution F
G view (Rear)
Screw extraction from the FRONT

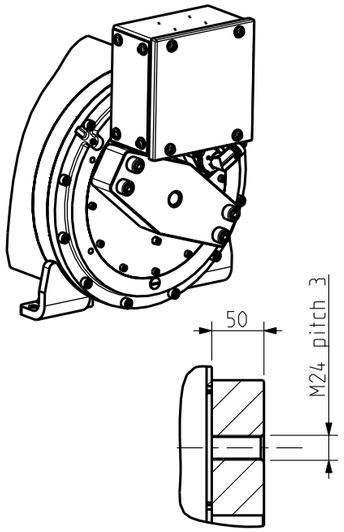

Execution P
G view (Rear)
Screw extraction from the FRONT
Screw cooling protection device

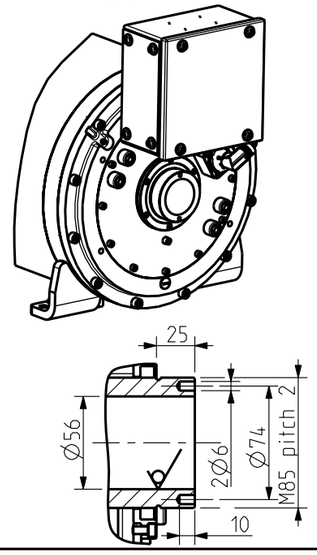

Execution R
G view (Rear)
Srew extraction from the REAR
Screw cooling protection device

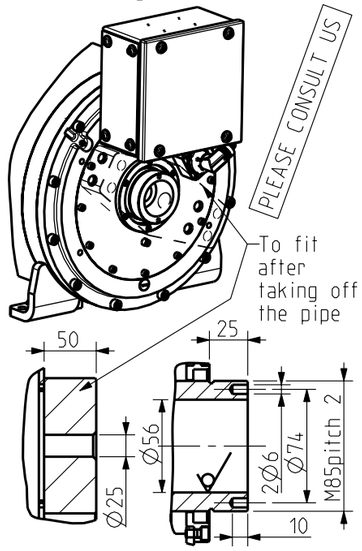

SHAFT END

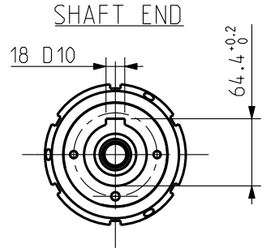

TECHNICAL SPECIFICATIONS :

- Thrust bearing : 29420
- Degrees of protection : IP54
- Construction type : IMB3
- Vibrations severity : Grade N

MOTORS SIZE	L1 Max	L2 Max	L3	L4
TMW 207 to 208	850	720	462	460
Up toTMW 206	750	620	362	360

MOTORS Size	TMW 202	TMW 203	TMW 204	TMW 205	TMW 206	TMW 207	TMW 208
WEIGHT Kg	305	320	335	350	365	405	420

Plan valable pour : -

Masse :

Ce document, propriete exclusive de PARVEX, ne peut etre communique, copie ou reproduit totalement ou partiellement sans son autorisation ecrite.

Dessine	26/07/07	BB	Vise
Modifications			

Echelle 17:100

Parker
SSD Parvex
8 Avenue du lac. BP249
21007-DIJON cedex-FRANCE
www.SSDdrives.com

TMW 200

OUTLINE DRAWING

Format	F	E	S	G	I
A3		x			

350055C20E0001 -